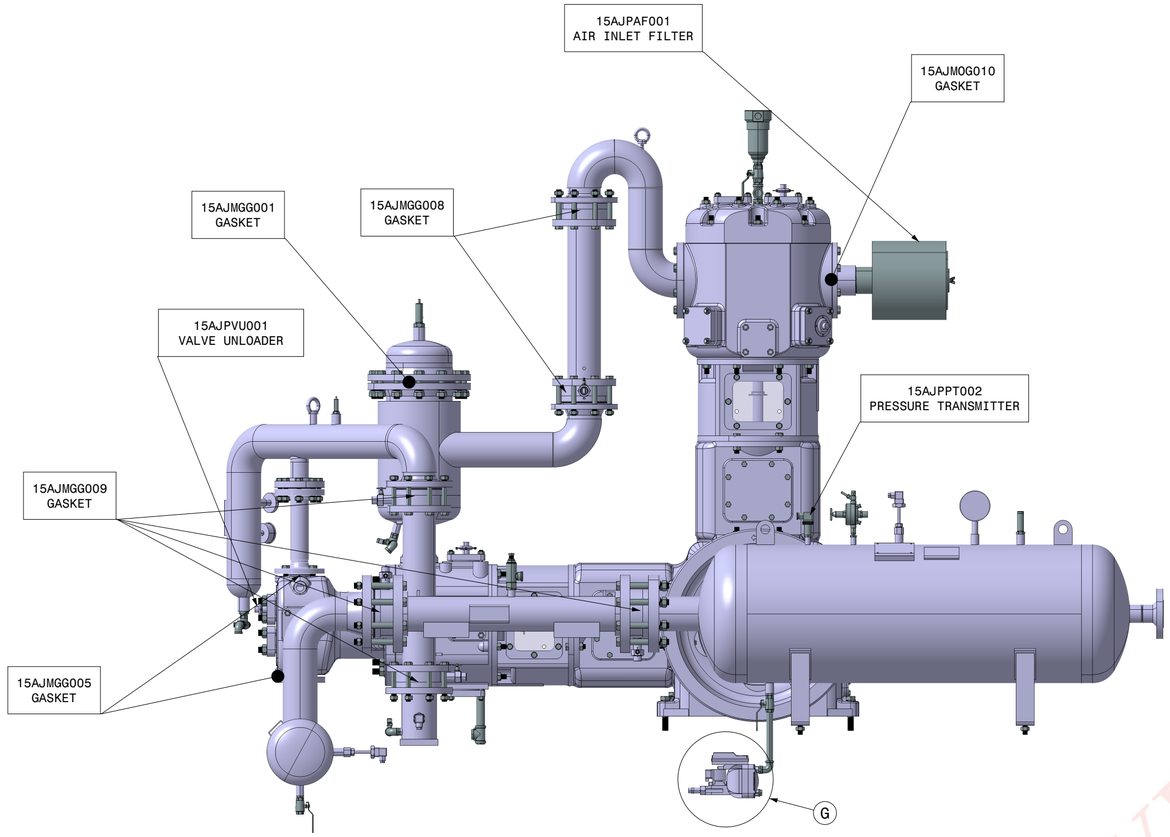

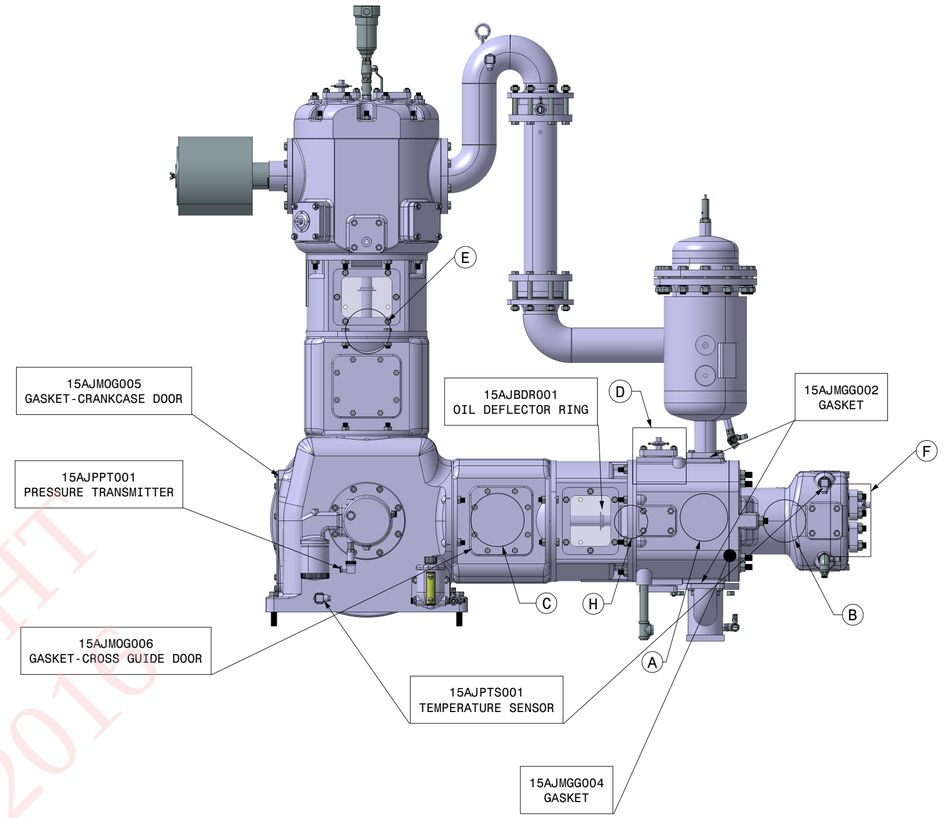

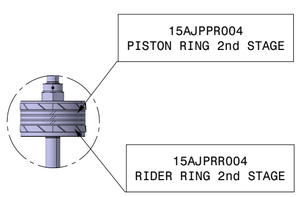

DETAIL A

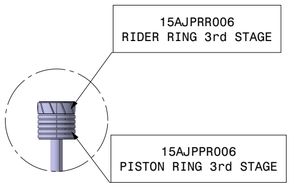

DETAIL B

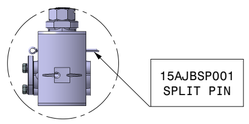

DETAIL C

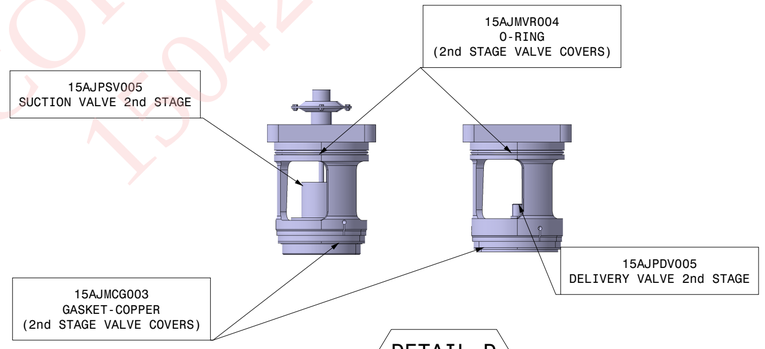

DETAIL D

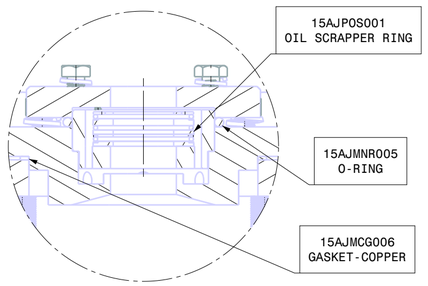

DETAIL E

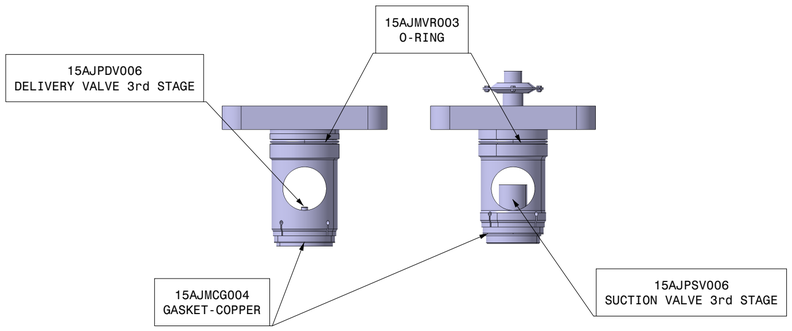

DETAIL F

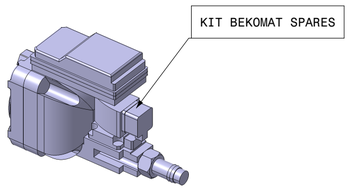

DETAIL G

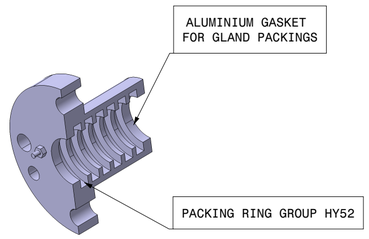

DETAIL H

COPYRIGHT
15042/2016

© COPYRIGHT 15042/2016

AJ COMPRESSORS LLP.

DRAWING TITLE

1st NECESSITY LAYOUT AJ11(4000 hrs HP)